EtherWAN

Ethernet Connectivity

for Energy & Utility

Technology | Application | Product

- **Field proven technology**
- **IEC61850-3/IEE1613 compliant**
- **KEMA tested**

- Modulized Managed Hardened Ethernet Switch with SFP options
- Unmanaged Hardened 8-port 10/100BASE Ethernet Switch
- Hardened 10/100BASE-TX to 100BASE-FX Media Converter
- Hardened Serial Device Servers with DNP 3.0 Transparency support

Power Substation

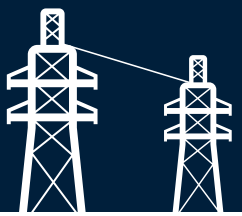

EtherWAN's EX87000 Hardened Managed Ethernet Switch, tested and approved by KEMA, connected to EtherWAN's new EX83000 series, DIN rail mount model with up to 16 10/100BASE and 2 Gigabit Ethernet Switch, provide a high level of immunity to electromagnetic interference (EMI) to be placed in mission-critical power substation application zone.

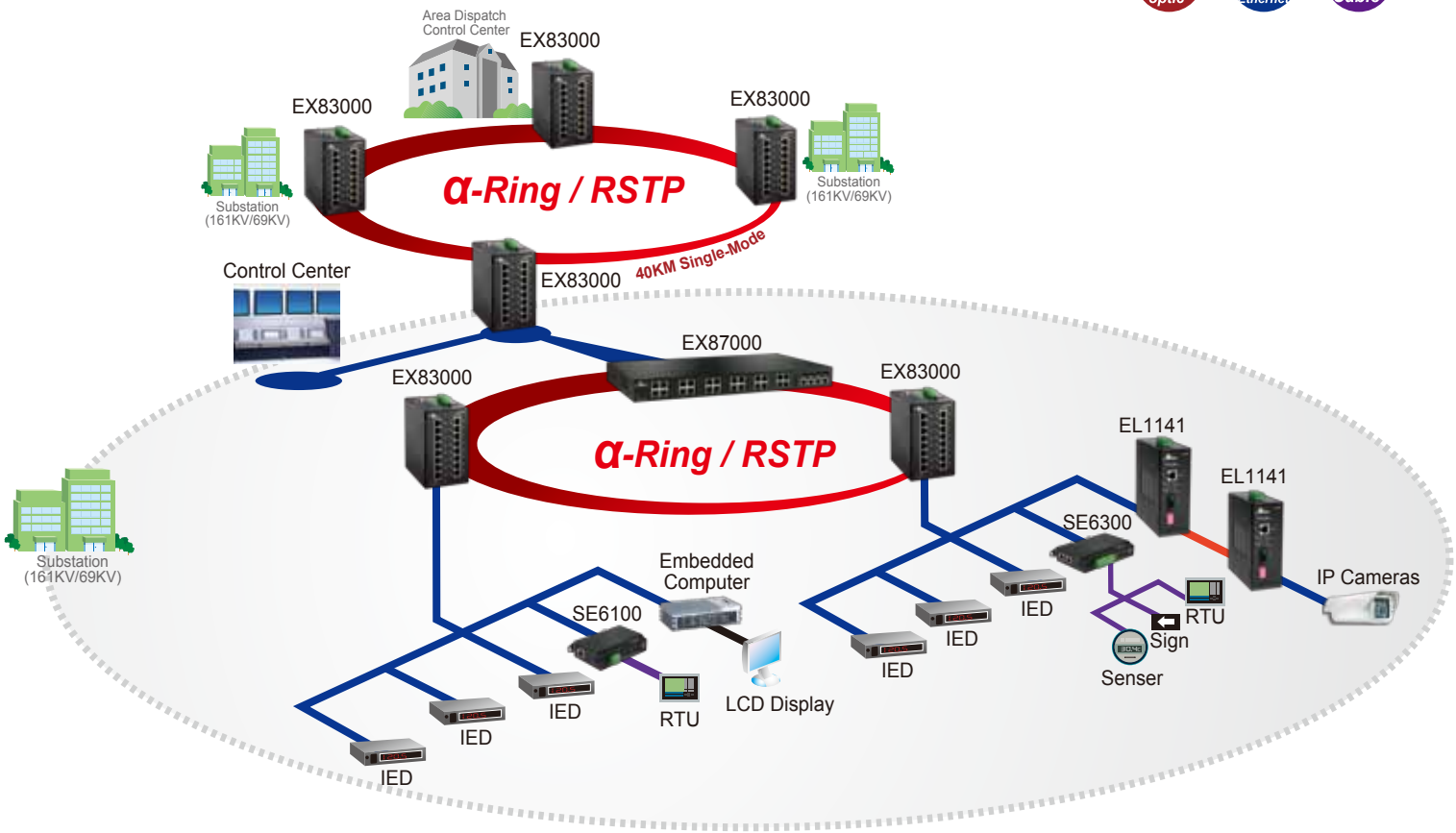

EX87000

IEC61850/IEEE1613 Managed Hardened 24-port 10/100BASE and 4-port Gigabit Ethernet Switch with SFP options

- Provides flexibility of 24-port 10/100BASE-TX/FX/BX/SFP plus 4-port 1000BASE-TX/SX/LX/BX/SFP (EX83000 for DIN-Rail 16-port option)
- Complies with IEC61850-3 & IEEE1613 Environmental requirements for power substation automation systems (Tested by KEMA)
- Supports α-ring and RSTP/MSTP/STP for Ethernet redundancy
- -40°C to 75°C (-40°F to 167°F) operating temperature range

EL1141

IEC61850/IEEE1613 Hardened 10/100BASE-TX to 100BASE-FX Media Converter

- Specific design for power automation applications with IEC61850-3, IEEE1613 standard compliances
- Specific design for industrial communication applications with UL508 safety certification, focus on various Industrial communication applications
- Supports DIN-Rail, Panel or Rack Mounting installation
- -40°C to 75°C (-40°F to 167°F) operating temperature range

Solar Power

Solar power systems, the most environmentally-friendly type of power plant, generates electricity without emitting Greenhouse gases. EtherWAN's EX71000 Managed Hardened Ethernet Switch has been designed for long distance fiber transmission and is perfect fo sensors (data collection), tracking systems and power meter data transmission. The EX71000's Alpha Ring (α-ring) feature also gives reliable availability in the control center.

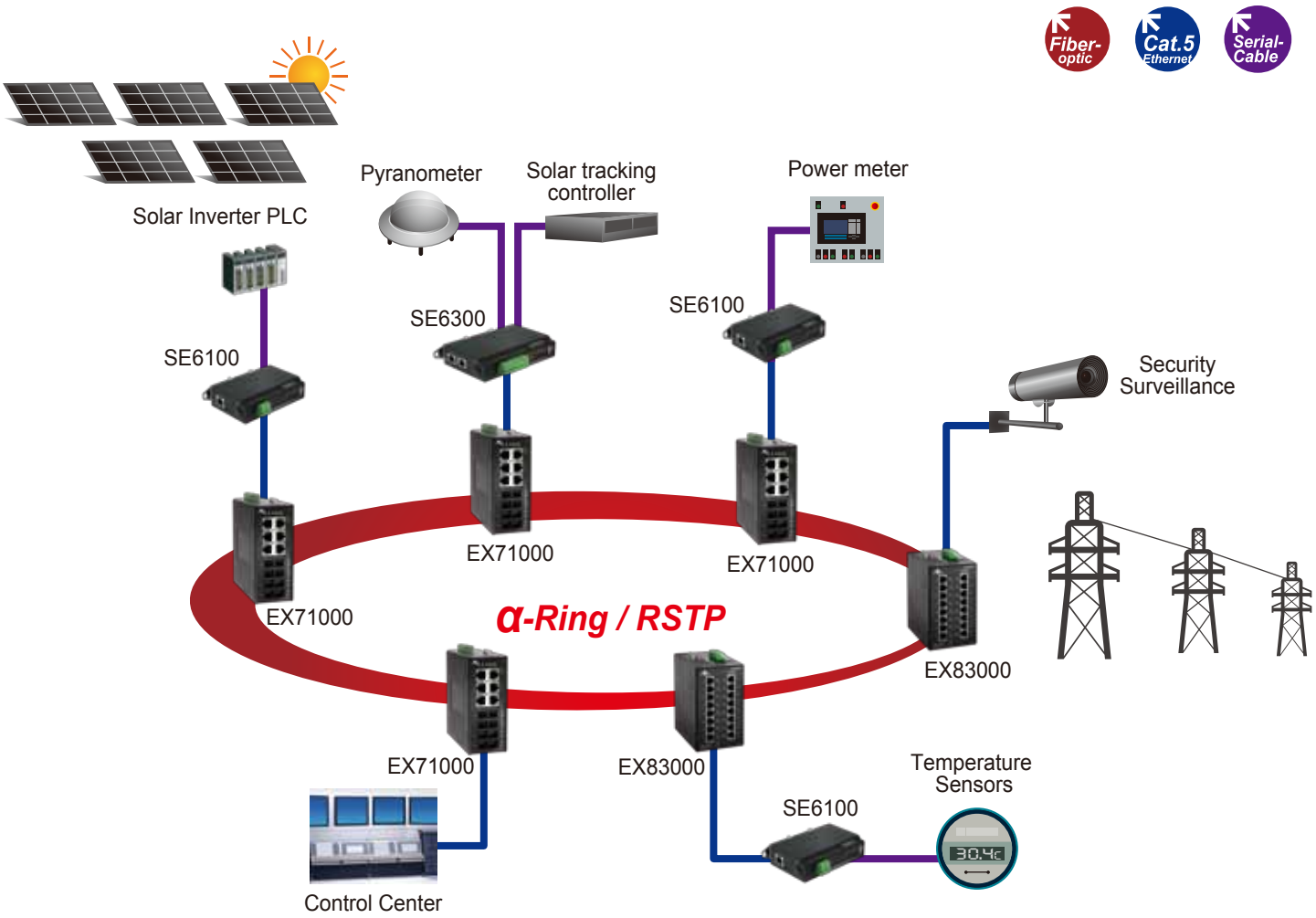

EX71000

Managed Hardened 8-port 10/100BASE and 2-port Gigabit Ethernet Switch with SFP options

- Provides flexibility of 8-port 10/100BASE-TX/FX/BX/SFP plus 2-port 1000BASE-TX/SX/LX/BX/SFP
- MAC-based trunking with automatic link fail-over
- Supports α-ring and RSTP/MSTP/STP for Ethernet redundancy
- -40°C to 75°C (-40°F to 167°F) operating temperature range

SE6300

Hardened 2/4 ports Serial Device Server

- Best hardened model for serial to Ethernet data transmission with various communication modes
- Serial interface with optical isolation protection is available
- Wide operation temperature specification supports hash environment applications
- Redundant Ethernet interfaces prevents Ethernet interruption
- -25°C to 70°C (-13°F to 158°F) operating temperature range

Wind Power

EtherWAN's EX42000 series unmanaged Industrial Ethernet Switches are installed in the control box of the wind turbine tower. The control box containing controllers and the EX42000 Ethernet Switch, converts the copper Ethernet to fiber optical transmissions. The base of the wind power control center employs the EX77000 Managed Hardened Ethernet Switches which provides long distance fiber transmission to pass control box information to the control center of the power company.

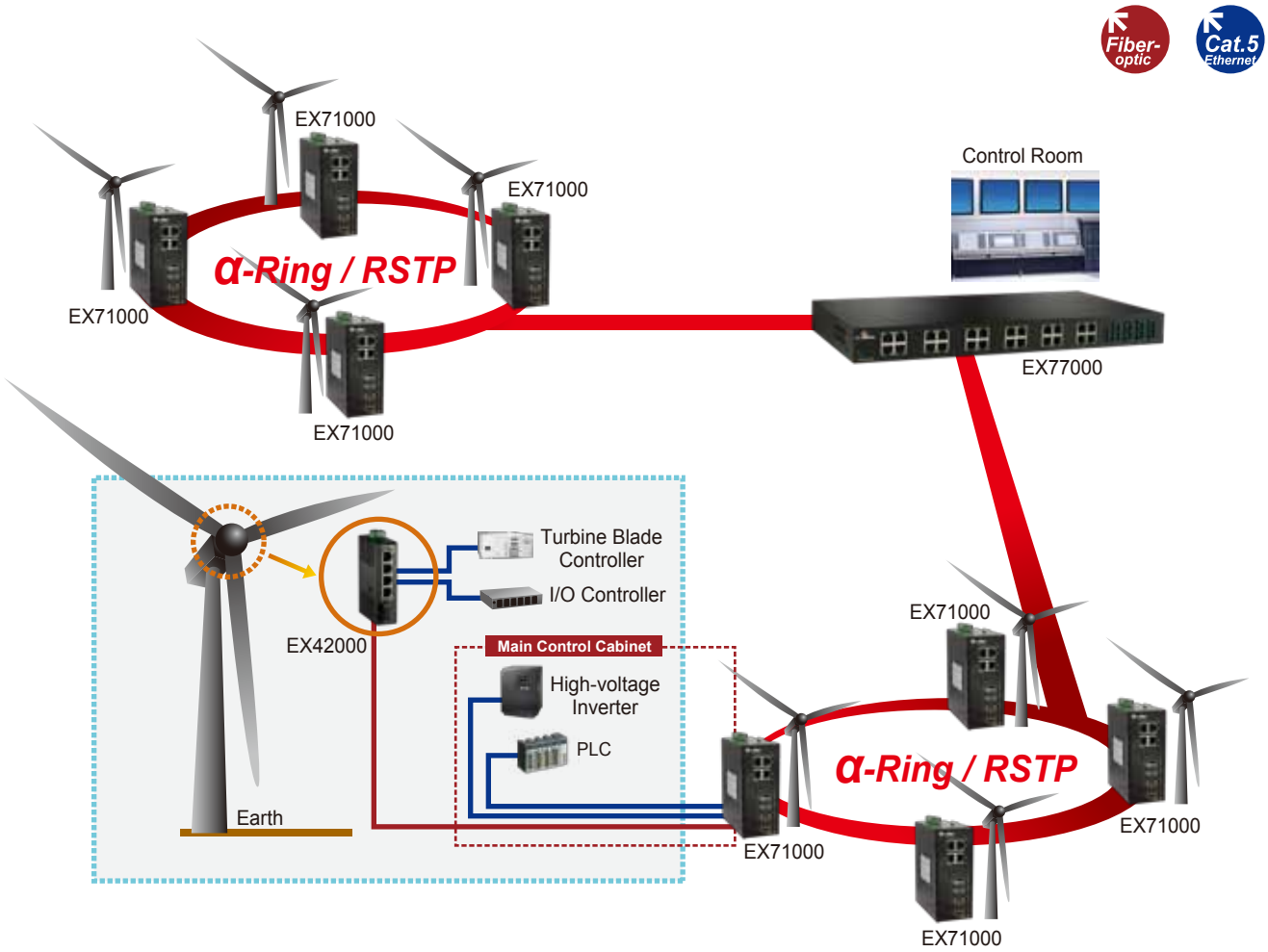

EX77000

Managed Hardened 24-port 10/100BASE and 4-port Gigabit Ethernet Switch with SFP options

- Provides flexibility of 24-port 10/100BASE-TX/FX/BX/SFP plus 4-port 1000BASE-TX/SX/LX/BX/SFP
- Supports α-ring and RSTP/MSTP/STP for Ethernet redundancy
- IP Multicast Filtering through IGMP Snooping V1, V2 & V3
- -40°C to 75°C (-40°F to 167°F) operating temperature range

EX42000

Unmanaged Industrial 5-port 10/100BASE Ethernet Switch

- 5-port 10/100BASE-TX or 4-port 10/100BASE-TX plus 1-port 100BASE-FX
- 12 to 48VDC Power inputs
- -10°C to 60°C (-14°F to 140°F) operating temperature range
- Provides DIN-Rail mounting
- Full wire-speed forwarding rate

Hydro Power

Hydro Power Solutions deliver an unparalleled range of high return options for the long-term flexibility and reliability of hydropower assets. EtherWAN's EX83000 series DIN rail mount model with 16 10/100BASE and 2 Gigabit Ethernet can be used as a connectivity solution for HV Motors, Dam Hatches Controller, distributed control systems and Turbines.

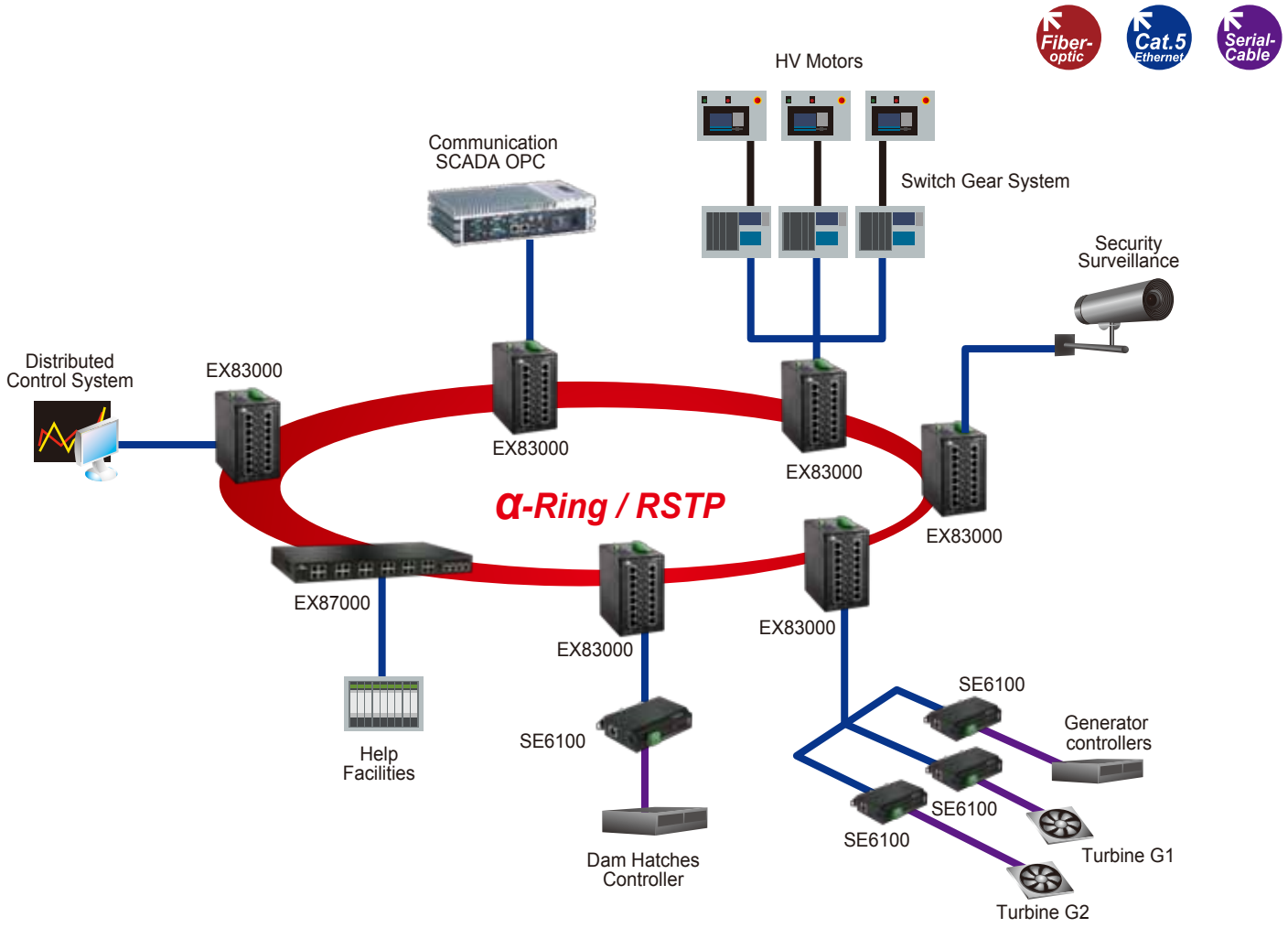

EX83000

IEC61850/IEEE1613 Managed Hardened 16-port 10/100BASE with 2-port Gigabit combo Ethernet Switch

- Provides flexibility of 16-port 10/100BASE-TX/FX/BX plus 2-port 1000BASE-SX/LX/BX combo
- Complies with IEC61850-3 & IEEE1613 Environmental requirements for power substation and energy related automation systems
- Supports α-ring and RSTP/MSTP/STP for Ethernet redundancy
- -40°C to 75°C (-40°F to 167°F) operating temperature range

SE6100

Hardened 1-port Serial Device Server

- Best hardened model for serial to Ethernet data transmission with various communication modes
- Serial interface with isolation protection is available
- Supports RS-232/422/485 serial communication
- Wide operation temperature specification supports harsh environment applications

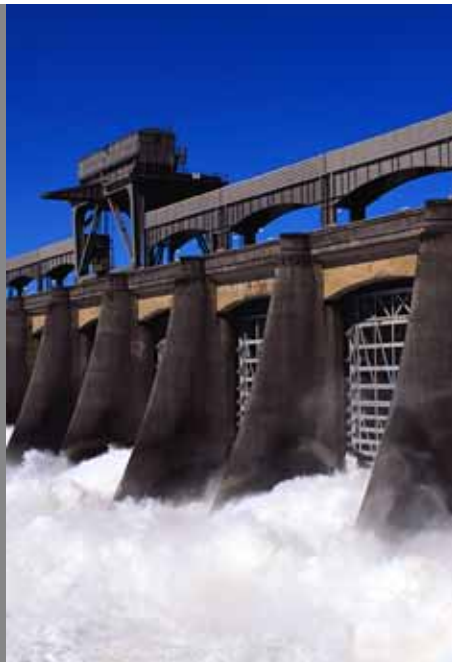

Power Feeding

FDCC (Feeding Control Center) collects all of the electricity distribution data from different FTUs (Feeding Terminal Unit). EtherWAN's FT5702, 2-port Self-healing Ring Fiber Modem provides fiber-optic Ethernet solution in order to compile information sending back to FDCC for data analysis.

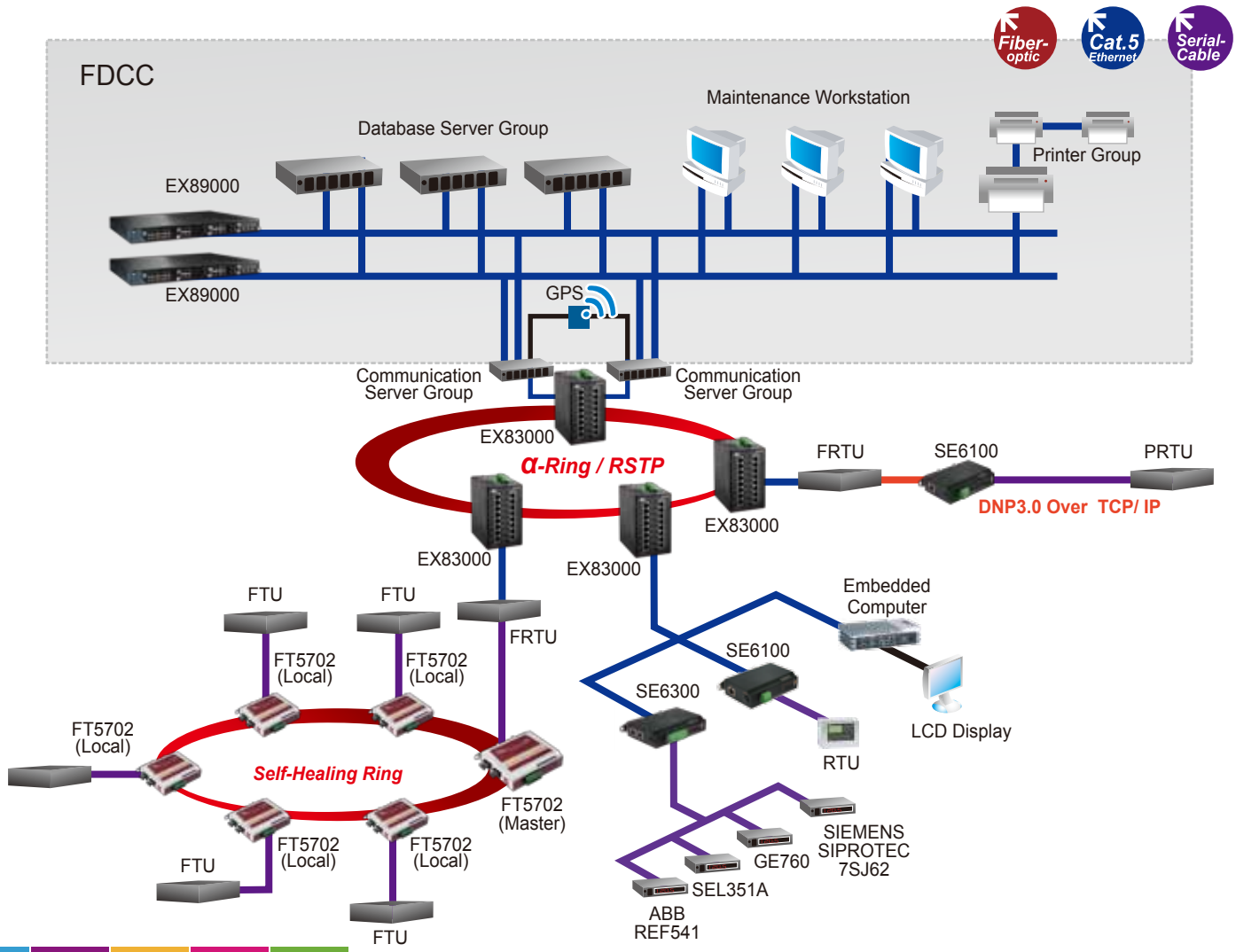

FT5702

Industrial 2-port RS232/422/485 Self-Healing Ring Fiber Modem

- Supports DNP3.0 protocol transparency
- Provides Self-Healing Ring feature to prevent network interruption
- Offers single-mode and multi-mode and SC, ST, WDM fiber optic options for both LAN ports
- Informs user by relay output in case of any disconnection
- -10°C to 60°C (14°F to 158°F) operating temperature range

EX89000

IEC61850/IEEE1613 Modulized Managed Hardened 24-port 10/100BASE and 4-port Gigabit Ethernet Switch with SFP options

- Modulized Ethernet Switch of 24-port 10/100BASE-TX/FX/BX/SFP and 4-port 1000BASE-TX/SX/LX/BX/SFP
- Complies with IEC61850-3 & IEEE1613 Environmental requirements for power substation automation systems
- Supports α-ring and RSTP/MSTP/STP for Ethernet redundancy
- -40°C to 75°C (-40°F to 167°F) operating temperature range

	EN50121-4	IEC61850-3 EN50121-4	UL60950-1	IEC61850-3 EN50121-4	IEC61850-3 EN50121-4

Model Name	EX71000	EX83000	EX77000	EX87000	EX89000
Interface					
Max. 10/100Base Ports	8	16	24	24	24 (Modulized)
Max. 10/100/1000Base Ports	2	2	4	4	4 (Modulized)
Machanical					
Installation*	D, P, R	D, P	R	R	R
Dimensions (WxDxH mm)	60 x 125 x 145	84 x 125 x 145	Single Power: 442 x 250 x 44 Dual Power: 442 x 375 x 44	Single Power: 442 x 284 x 44 Dual Power: 442 x 375 x 44	Single Power: 442 x 343 x 44
Power Input					
No. of Power Input	3	3	1 or 2	1 or 2	1
110 - 240VAC	-	-	✓	✓	✓
Terminal Block	12 - 48VDC	12 - 48VDC	± 48VDC, 88 - 370VDC	± 48VDC, 88 - 370VDC	± 48VDC, 88 - 370VDC
DC Jack	12VDC	12VDC	-	-	-
Operating Temperature	-40°C~75°C	-40°C~75°C	-40°C~75°C	-40°C~75°C	-40°C~75°C
Network Redundancy					
α-Ring / α-Chain	✓	✓	✓	✓	✓
STP / RSTP / MSTP	✓	✓	✓	✓	✓
Network Management & Control					
	VLAN, QoS, IGMP, GMRP, Bandwidth Rate Control, LACP, Port Trunking, Port Mirroring, Packet Filtering, IEEE802.1x Security, DHCP Server, DHCP Client, SNMP (v1, v2c, v3), RMON, Web Management, Telnet Management, RS-232 Console Management, SSL / SSH				
Regulatory Approvals					
CE / FCC / VCCI	✓	✓	✓	✓	✓
IEC61850-3 / IEEE1613	-	✓	-	✓	✓
EN50121-4	✓	✓	-	✓	✓

	IEC61850-3 EN50121-4	UL60950-1	EN50121-4 IEC61850-3 IEEE1613	DNP3.0 Transparency	DNP3.0 Transparency	DNP3.0 Transparency

Model Name	EX47000	EX42000	EL1141
Interface			
Max. 10/100Base Ports	8	5	2
Machanical			
Installation*	D, P	D	D, P, R
Dimensions (WxDxH mm)	60 x 125 x 145	26 x 70 x 110	50 x 110 x 135
Power Input			
No. of Power Input	3	1	3
110 - 240VAC	-	-	-
Terminal Block	12 - 48VDC	12 - 48VDC	12 - 48VDC
DC Jack	12VDC	-	12VDC
Operating Temperature	-40°C~75°C	-10°C~60°C	-40°C~75°C
Network Redundancy			
α-Ring / α-Chain	-	-	-
STP / RSTP / MSTP	-	-	-
Regulatory Approvals			
CE / FCC / VCCI	✓	✓	✓
UL508	-	-	✓
IEC61850-3 / IEEE1613	✓	-	✓
EN50121-4	✓	-	✓
UL60950	-	✓	-

Model Name	FT5702	SE6300	SE6100
Interface			
Max. 10/100Base-TX	-	2 (Redundancy)	1
Max. 100Base-FX	2	2 (Redundancy)	1
1.5KV Managetic Isolation	✓	✓	✓
Ethernet Redundancy	✓	✓	-
Serial Interface			
RS-232/422/485	2	4	1
RS-422/485	-	2 (SE6320)	1 (SE6110)
Connector Type	DB9	DB9 / RJ50 / TB	DB9 / TB
ESD Protection	✓	✓	✓
2KV Serial Line Isolation	-	SE6320	SE6110
Speed	50bps - 460.8kbps	50bps - 460.8kbps	50bps - 460.8kbps
Software			
Operation Modes	Self-Healing Ring	TCP, UDP, Pair Connection	
COM Driver Support	-	Windows 2000/XP/2003/Vista/7	
Configuration Options	Console	Web, Telnet Console, SNMP	
Machanical			
Installation*	D, P	D, P	D, P
Dimensions (WxHxD)	100 x 125 x 30	100 x 125 x 30	70 x 110 x 30
Power Input			
No. of Power Input	2	3	2
Terminal Block	12 - 32VDC	12 - 32VDC	12 - 32VDC
DC Jack	-	12 VDC	12 VDC
Operating Temperature	-10°C ~ 60°C	-25°C ~ 70°C	-25°C~75°C (Fiber) -34°C~75°C (Copper)
Regulatory Approvals			
CE / FCC / VCCI	✓	✓	✓

* D: DIN Rail Mounting, R: Rack Mounting, P: Panel Mounting

EtherWAN Systems, Inc.

US Office
4570 E. Eisenhower Circle, Anaheim, CA 92807
TEL: +1-714-779-3800
FAX: +1-714-779-3806
Email: info@etherwan.com

Pacific Rim Office
8F, No. 2, Alley 6, Lane 235, Baoqiao Rd.,
Xindian District, New Taipei County 231, Taiwan
TEL: +886-2-6629-8986
FAX: +886-2-6629-7758
Email: info@etherwan.com.tw

www.etherwan.com

© 2014 EtherWAN Systems Inc. All rights reserved.

69G-EW14060AC